Instructions for use

LED mirror round DUBI 60 / 80 / 100 cm

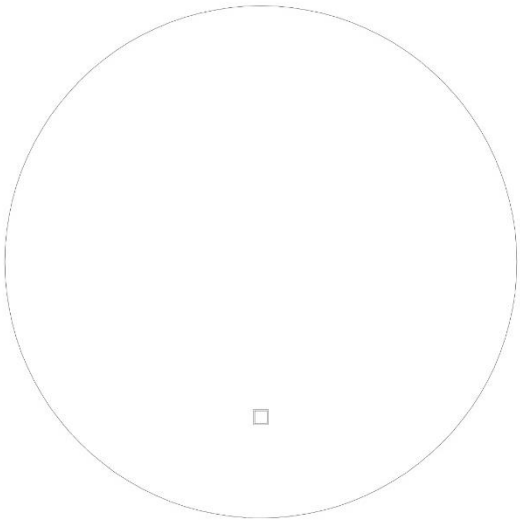

Designed in Germany

Home Deluxe GmbH | Schanzeweg 2, 32312 Lübbecke | Phone: 05743 - 61 81 0

Table of contents

1. General information ... 3
1.1. Product overview ... 3
1.2. General notes ... 3
1.3. Warranty ... 3
2. Information on the instructions for use ... 4
2.1. Availability of the instructions for use ... 4
2.2. Target groups of the instructions for use ... 4
2.3. Information on the translation ... 4
2.4. Explanation of symbols ... 4
2.1. General information on the instructions for use ... 5
2.2. Intended use ... 5
2.3. General safety instructions ... 6
3. Product features ... 8
3.1 Technical data ... 8
4. Scope of delivery ... 9
5. Assembly ... 10
5.1. Safety instructions ... 10
5.2. Assembly of the product ... 10
6. Application ... 12
6.1. Safety instructions ... 12
6.2. Initial commissioning ... 12
6.3. Operation ... 12
6.4 Operation ... 12
6.4. Storage location ... 12
7. Troubleshooting ... 13
8. Maintenance and care ... 14
8.1. Safety instructions ... 14
9. Dismantling ... 14
9.1. Safety instructions ... 14
10. Disposal instructions ... 14
Electrical and electronic equipment - Information for private households ... 15

IMPORTANT:
KEEP FOR FUTURE REFERENCE.
READ CAREFULLY!

Dear customer,

Thank you for choosing a product from **Home Deluxe GmbH**. We hope you enjoy your new LED mirror round DUBI.

The instructions for use support you during installation, commissioning, operation and maintenance of the product. The instructions for use and the safety instructions must be read carefully and in full. Observe these instructions to avoid danger.

1. General information

1.1. Product overview

Model: LED mirror round DUBI

Model:	Article ID:	Variant ID:
LED mirror round DUBI 60 cm	22332	57389
LED mirror round DUBI 80 cm	22333	57390
LED mirror round DUBI 100 cm	24411	60537

1.2. General notes

In order to meet our standards, we are constantly improving quality, simplifying installation and operation and adapting products to customer requirements. Due to these changes, the current version of the instructions for use can be found on our homepage.

The term "product" is used in the instructions for use for the "LED mirror round DUBI".

1.3. Warranty

The statutory liability for defects and warranty rights apply from the date of purchase.
Home Deluxe GmbH accepts no liability for damage caused by non-compliance with the instructions for use. Complaints arising from improper installation or use are excluded from the warranty. In the event of defects in the product, please contact our customer service in writing using the contact form on our homepage, stating the product name, serial number and a photo of the type plate:

Home Deluxe GmbH
Schanzeweg 2
32312 Lübbecke
Germany
Tel: +49 (0)5743 6181-0
www.home-deluxe-gmbh.de

If you have any further questions, please contact our customer service team using the contact form.

2. Information on the instructions for use

2.1. Availability of the instructions for use

The instructions for use are part of the product and should be kept complete and in the immediate vicinity of the product.

If the product is passed on to third parties, the instructions for use must also be handed over.

2.2. Target groups of the instructions for use

The instructions for use must be read and observed by every person involved in one of the following activities or uses:

- Unpacking
- Assembly / Installation
- Commissioning / Operation
- Maintenance / inspection / care
- Troubleshooting / repair
- Waste disposal

2.3. Information on the translation

The original instructions for use were written in German. Any other language available is a translation of the German version.

2.4. Explanation of symbols

Icon	Explanation of symbols
	**WARNING** The symbol indicates possible dangers that could result in fatal or serious injuries. Before carrying out the corresponding installation or application step, read the corresponding note.
	**INFO** The symbol provides important information and indicates material damage. Observe these before carrying out the corresponding installation or application step in order to understand problems and avoid damage.
	**CE marking** The symbol declares the conformity of the product with the applicable requirements of the European Community. The current declaration of conformity is available on request from Home Deluxe GmbH.
	**Read instructions for use** The symbol indicates that the operating instructions must be read carefully before mounting/installing and/or operating the appliance.
	**Disposal of electrical and electronic appliances** Electrical and electronic appliances must not be disposed of with household waste!
	**Alternating current** The symbol indicates that the product is operated with alternating current.

Icon	Explanation of symbols
	**Protection class I** The symbol indicates that all conductive housing parts of the equipment must be connected to the protective conductor system of the fixed electrical installation. It is a protective earthing. In the event of a fault current, the circuit is de-energized by a fuse.
IP44	**Protection class** **1. Code number:** Protected against solid foreign bodies with a diameter ≥ 1.0 mm **2. Code number:** Protection against splashing water from all sides

2.1. General information on the instructions for use

The instructions for use refer to the LED mirror round DUBI. It contains important information on installation and operation. The instructions for use, in particular the safety instructions, must be read carefully before using the product; keep the instructions for use in a safe place. Only use the product as described in these instructions for use to prevent accidental injury or damage. If you pass the product on to a third party, these instructions for use must also be handed over.

2.2. Intended use

The product is of high quality, durable and intended or suitable exclusively for use in private households to a reasonable and customary extent. Furthermore, our product is **not** intended for commercial use. Commercial use is only permitted with the written consent of Home Deluxe GmbH.

Only use the product as described in these instructions for use. Any other use is considered improper and may result in damage to property or personal injury. The manufacturer accepts no liability for damage caused by improper or incorrect use.

2.3. General safety instructions

General hazard warnings



- Improper handling can lead to considerable personal injury and damage to property. For this reason, assembly, installation, commissioning, troubleshooting, maintenance and repair work may only be carried out by qualified persons.
- Only mount the product on walls
- The product can be used by children aged from 8 years and above and persons with reduced physical, sensory or mental capabilities or lack of experience and knowledge if they have been given supervision or instruction concerning use of the appliance in a safe way and understand the hazards involved.
- **Only** install the product if the scope of delivery is complete and in perfect condition.
- Ensure that all parts are fitted correctly. There is a risk of injury if they are not fitted correctly. Damaged parts can affect safety and function.
- Do not make any design changes to the product. Any modifications must be authorized in writing by the manufacturer and carried out in accordance with the instructions.
- Check the fastening at regular intervals .
- Only mount the product on walls that can permanently withstand the weight of the product. Use the appropriate mounting material (dowels) for the correct wall condition. If the wall is damaged (e.g. cracks, etc.), consult a specialist.
- The product is not intended for mounting on the ceiling and must not be mounted on the ceiling.
- **Risk of injury:** Do not look directly into the light and do not point the light into other people's eyes as this can cause serious eye injuries.

Danger for children



- Keep children away from packaging materials. There is a choking hazard if swallowed!
- Keep children away from the assembly site during assembly. The scope of delivery contains small parts that can be swallowed or cause serious injury .
- Make sure that small children do not put small parts in their mouths.
- The product is not a children's toy, climbing wall or sports equipment. The individual elements of the product can break off and fall down under heavy loads, which can result in death.
- Do not install the product directly or in the immediate vicinity of a play area.
- Explain to the children how to use the product correctly and never leave them unsupervised while playing.

Risk of injury

Improper handling of the product can lead to injuries



- Check the product for visible damage before each use.
- If the product is damaged, it must no longer be used. Damaged parts must be repaired or replaced with original spare parts.
- Ensure that the product is permanently fixed to prevent injuries.
- To avoid the risk of electric shock, all installations and corresponding maintenance work must be carried out by a qualified electrician.
- If the mains cable for the power supply is damaged, take the product out of operation until the mains cable is replaced by the manufacturer, its customer service or a qualified electrician.
- **Danger to life due to electrical voltage**: There is an immediate danger to life if live parts are touched. Damage to the insulation or individual components can be life-threatening. -> If the insulation is damaged, switch off the power supply immediately and arrange for repairs.

Risk of damage



- Improper handling of the product can lead to damage.
- Repair and maintenance work on the electronics may only be carried out by a qualified electrician.
- Do not open the packaging with sharp objects (e.g. knives, scissors or similar) as this may damage the product.
- Do not climb on the product, parts may fall off.
- Do not use the product near sources of heat or naked flames.

Explosion hazard



- Do not store any highly flammable, combustible or explosive substances inside the product.

3. Product features

3.1 Technical data

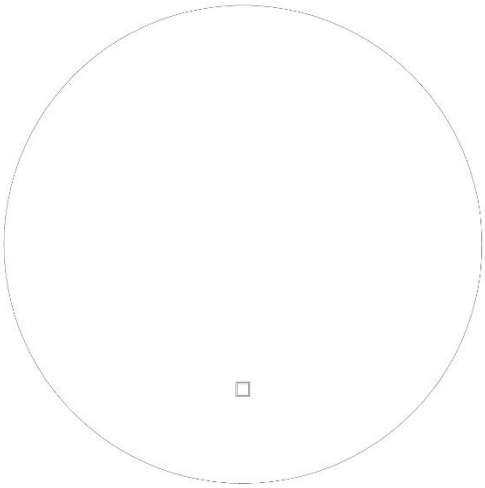

LED mirror DUBI	60 cm	80 cm	100 cm
Mirror thickness	4 mm	4 mm	4 mm
Weight	6 kg	8 kg	9 kg
Cool white light	6500 K	6500 K	6500 K
Neutral white light	4000 K	4000 K	4000 K
Warm white light	3000 K	3000 K	3000 K
Tension	220-240 V AC	220-240 V AC	220 - 240 V AC
Frequency	50 / 60 Hz	50 / 60 Hz	50 / 60 Hz
Protection class	IP 44	IP 44	IP 44
Overall performance	24 W	24 W	45 W
Luminous flux	2200 lm	2200 lm	4320 lm

This product contains a light source of energy efficiency class F.



4. Scope of delivery

Check the packaging for external damage on delivery. Furthermore, immediately after unpacking, check that the scope of delivery is complete and that the product and all components are in perfect condition. Only assemble the product if the scope of delivery is complete and undamaged.

Components

No.	Description	Quantity	Component
A	LED mirror DUBI	1	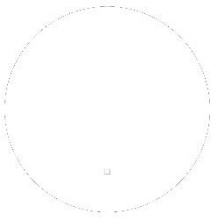
B	Dowel	2	
C	Screw	2	

5. Assembly

- All health and safety information must be read.

5.1. Safety instructions

Risk of injury

Improper handling during installation can lead to injuries

- Please make sure that the package is opened at the top.
- Extensive technical knowledge is required to install the product. **Only** install the product yourself if
  - you are sure that the product can be installed in the position selected for mounting.
  - you understand the operating instructions.
  - you have the necessary tools.
  - you have the necessary technical knowledge.
- Keep children and pets away from the product installation site during assembly. The scope of delivery contains small parts that can be swallowed or cause serious injury.
- **Only** install the product if the scope of delivery is complete and in perfect condition.
- Before installing the product, check the wall on site to ensure that it can withstand the load permanently. Use the correct fastening material according to the condition of the wall. If the wall is damaged (e.g. cracks, etc.), consult a structural engineer.
- Check the wall for any cables or other lines laid under the plaster/brick before installation.
- Note that the load-bearing capacity of the fastening material and the drill hole geometry are of decisive importance.
- Operating errors, assembly errors or damage caused by assembly are excluded from the warranty.
- Do not make any design changes to the product without consulting the manufacturer; this can lead to dangerous situations and will invalidate the warranty.
- At least 2 people are required to install the product.
- Wear protective clothing such as safety goggles, safety shoes and protective gloves during assembly.

5.2. Assembly of the product

The product is delivered disassembled and can be assembled with little effort. Follow the assembly instructions carefully. The function and safety of the product cannot be guaranteed if the instructions are not followed.

required

	Pencil		Measuring tape
	Drill		

- **Note:** The following instructions must be read carefully.

Illustration	Description

DUBI 60 cm 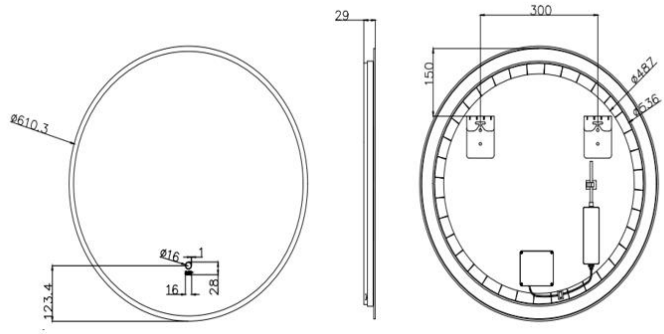	**Step 1:** Drill the holes for the dowels at a distance of 300 mm and insert the hooks. Make sure that the hooks sit correctly and do not fall out. Then hang up the LED mirror. **Note:** The LED mirror should **only** be connected by a qualified electrician
DUBI 80 cm 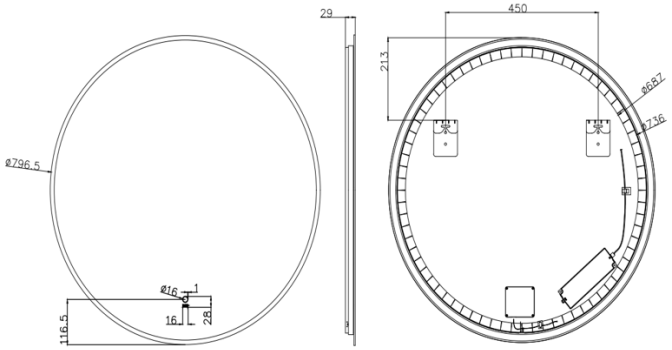	**Step 1:** Drill the holes for the dowels at a distance of 450 mm and insert the hooks Make sure that the hooks are properly seated and do not fall out. Then hang up the LED mirror. **Note:** The LED mirror should **only** be connected by a qualified electrician.
DUBI 100 cm 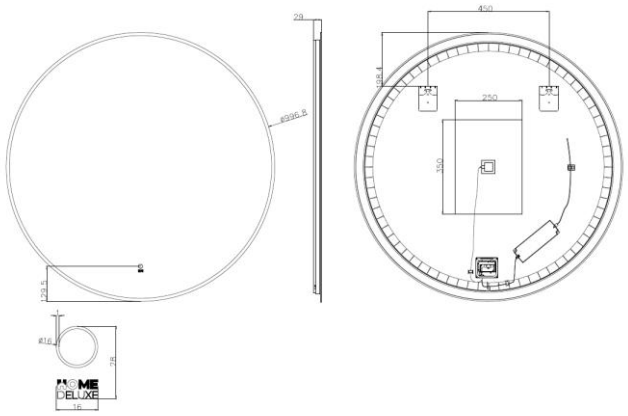	**Step 1:** Drill the holes for the dowels at a distance of 450 mm and insert the hooks Make sure that the hooks are properly seated and do not fall out. Then hang up the LED mirror. **Note:** The LED mirror should **only** be connected by a qualified electrician.

6. Application

6.1. Safety instructions

The following health and safety information must be read carefully.

Risk of injury

Improper handling during operation can lead to injuries

- Do not use a damaged or incomplete product.
- Do not make any design changes to the product without consulting the manufacturer.
- The product is not a children's toy, climbing wall or sports equipment. Children are not permitted to play with the product.
- If the product's power cable is damaged, take the product out of operation and contact the manufacturer for further instructions.
- Do not hang any objects on the product.

6.2. Initial commissioning

Check the product for damage before using it for the first time. The product may only be used if it is undamaged.

6.3. Operation

Check before using the product,

- the proper condition.
- the electrical connection

6.4 Operation

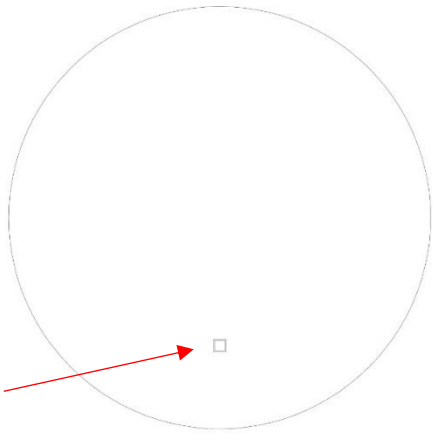

Operating the LED lighting

- Press once = LED lighting
- Press a second time = LED lighting
- Press a third time = color function (color selection)
- After switching off the LED lighting, the memory function is activated after 8 seconds
- Press and hold = dimming function

The LED lighting is used exclusively for scene/accent lighting and is not suitable for other applications.

6.4. Storage location

- Store the product in a cool and dry place

7. Troubleshooting

If the following faults occur during operation, please check the following fault causes using the following table. If the fault cannot be rectified by the measures listed, take the product out of operation.

Error	Possible cause	Solution
The product wobbles or vibrates.	- Fixing screws have come loose - Product is not correctly or crookedly hooked into the device - Incorrect fastening material used	- Tighten the fastening screws - Check the product and mount it correctly - The holes were drilled incorrectly - Fastening material must match the wall composition (e.g. correct dowels)
The product cannot be switched on	- No mains voltage available	- Check power supply - Check RCD protection -
Product hangs crooked	- The fastening screws have come loose - The product is overloaded	- Tighten the fastening screws - Relieve product

If another problem occurs with the product, please contact us.

8. Maintenance and care

8.1. Safety instructions

Risk of injury
Improper handling during operation can lead to injuries



- The power supply to the product must be switched off before cleaning/maintenance/care.
- Disconnect the product from the power supply if work, such as window cleaning, is being carried out in the vicinity.
- Do not operate the product if work, such as window cleaning, is being carried out in the vicinity.
- The power cable from the product may only be replaced with the same type of cable supplied by the manufacturer. Contact the manufacturer's customer service.
- Cleaning and maintenance must not be carried out by children.



Clean the surfaces with a damp cloth and mild detergent. Do not use aggressive cleaning agents or high-pressure cleaners for cleaning. Also follow the cleaning agent manufacturer's instructions

- The LED lighting cannot be replaced once the luminaire has reached the end of its service life. The entire LED lighting must be replaced.

9. Dismantling

9.1. Safety instructions

Risk of injury
Improper handling during disassembly can lead to injuries



- Disconnect the product from the power supply before dismantling. Contact with live components can result in an electric shock, which can cause burns or death.
- Secure the product against falling before dismantling.

Disassembly of the product must be carried out in reverse order to assembly. (**see chapter Assembly**)

10. Disposal instructions



- Dispose of the product and all components in accordance with local and country-specific regulations to prevent damage to the environment.
- Our packaging is made from environmentally friendly materials. They can be recycled and thus serve as valuable raw materials. Dispose of the packaging material (cardboard, dirty packaging, etc.) separately and properly in accordance with the applicable national regulations.
- Contact customer service if you are unsure about disposal.
- You can also obtain information on proper disposal from local waste disposal centers.

Electrical and electronic equipment - Information for private households

The Electrical and Electronic Equipment Act (ElektroG) contains a large number of requirements for the handling of electrical and electronic equipment. The most important ones are summarized here.

1. Separate collection of old appliances

Electrical and electronic appliances that have become waste are referred to as old appliances. Owners of old appliances must dispose of them separately from unsorted municipal waste. They must separate used batteries and accumulators that are not enclosed in the old appliance, as well as lamps that can be removed from the old appliance without destroying them, from the old appliance without destroying them before handing them in at a collection point. Separate old appliances in order to prepare them for reuse.

2. Batteries and rechargeable batteries



As a rule, owners of waste appliances must separate waste batteries and accumulators that are not enclosed by the waste appliance before handing them in at a collection point. This does not apply if the waste equipment is handed in to public waste management authorities and separated there from other waste equipment for the purpose of preparing it for reuse.

3. Options for returning old appliances

Owners of old appliances from private households can hand them in at the collection points of the public waste disposal authorities or at the take-back points set up by manufacturers or distributors in accordance with the ElektroG. An online list of collection and take-back points is available on the website: https://www.stiftung-ear.de or https://www.take-e-back.de.

4. Data protection notice

Old devices often contain sensitive personal data. This applies in particular to information and telecommunications technology devices such as computers and smartphones. In your own interest, please note that each end user is responsible for deleting the data on the old devices to be disposed of.

5. Take-back obligation of distributors

Distributors with a sales area for electrical and electronic equipment of at least 400 m2 and food distributors with a total sales area of at least 800 m2 who offer and make available electrical and electronic equipment on the market several times per calendar year or on a permanent basis are obliged to do so,

- when supplying a new electrical or electronic appliance to an end user, to take back free of charge at the place of supply or in the immediate vicinity an old appliance of the end user of the same type that essentially fulfills the same functions as the new appliance, and
- at the end user's request, to take back old appliances that do not exceed 25 cm in any external dimension free of charge in the retail store or in the immediate vicinity thereof; the take-back may not be linked to the purchase of an electrical or electronic appliance and is limited to three old appliances per type of appliance.

6. Meaning of the "crossed-out dustbin" symbol



The symbol of a crossed-out dustbin regularly shown on electrical and electronic appliances indicates that the appliance in question must be collected separately from unsorted municipal waste at the end of its service life.

- Manufacturer registration number
- As a manufacturer within the meaning of the ElektroG, we are registered with the responsible Stiftung Elektro-Altgeräte Register (Nordostpark 72, 90411 Nuremberg) under the following registration number: WEEE-Reg. No. DE86467979

Home Deluxe GmbH
Schanzeweg 2
32312 Lübbecke
Germany
Tel: +49 (0)5743 6181-0
www.home-deluxe-gmbh.de

GA-188-00_DUBI
2023/12